Building the v3.0 PCB for miniFPGA

Preparations for the build

Identify all components.

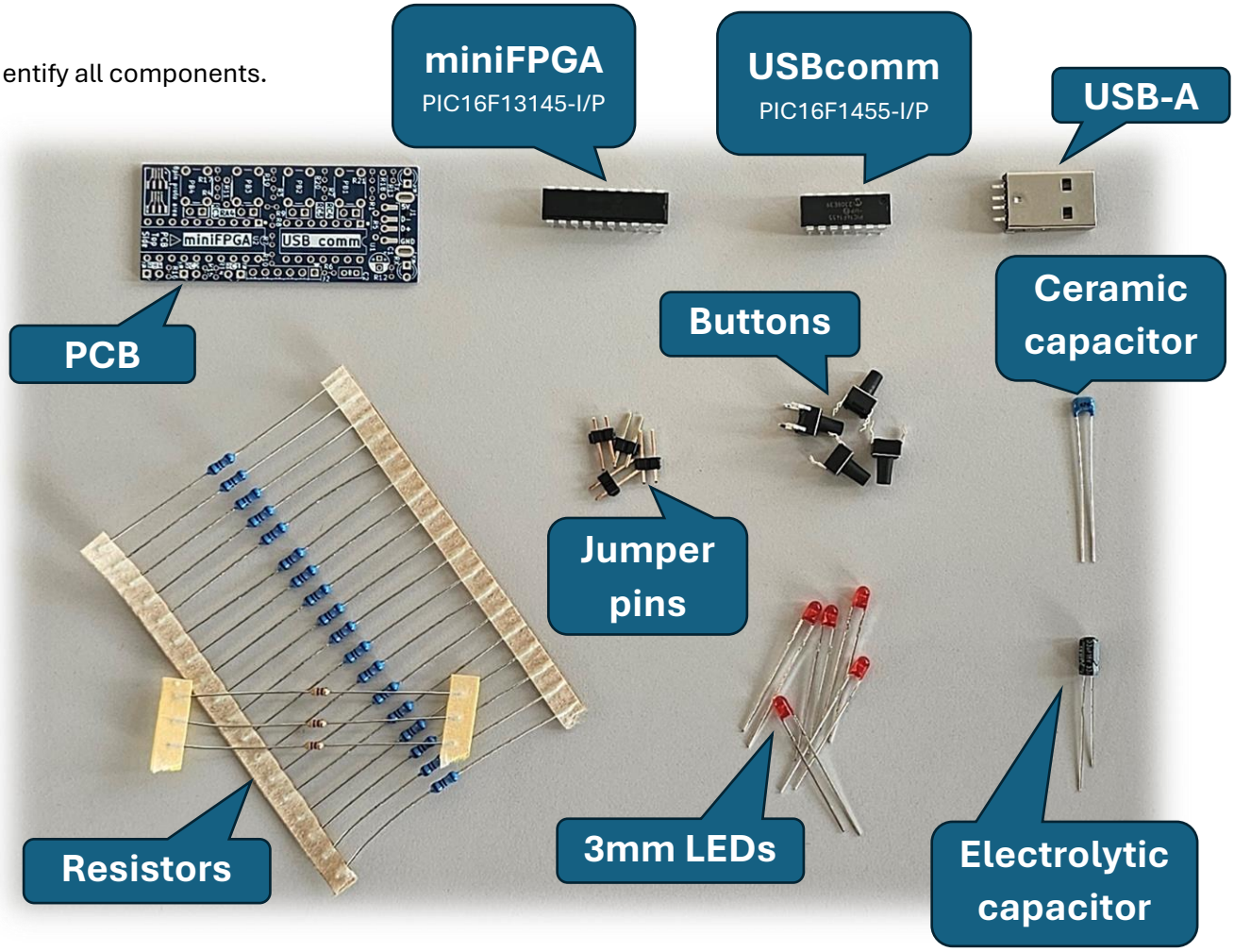

Find the top side of the PCB, that is clearly marked as “PCB Top Side”.

In this design all of our components will be placed only on the top side of the PCB. We will solder the components from the bottom side. Exception is the USB-A connector, that require soldering both from bottom and top side.

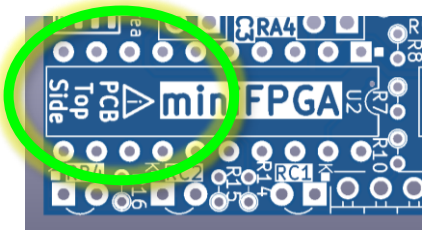

PCB building steps

The USB connection

Place and solder the USB-A connector (J1). The connector has 4 Surface Mount Pins (SMT pins) and 2 through hole pins. Insert the connector from top side, flip the PCB and start the soldering with the through hole pins on the bottom side. Flip the PCB and solder the SMT pins. Make sure all pins are soldered properly to avoid USB communication issues.

After completing this step, your PCB should have following components soldered (current step highlighted in green)

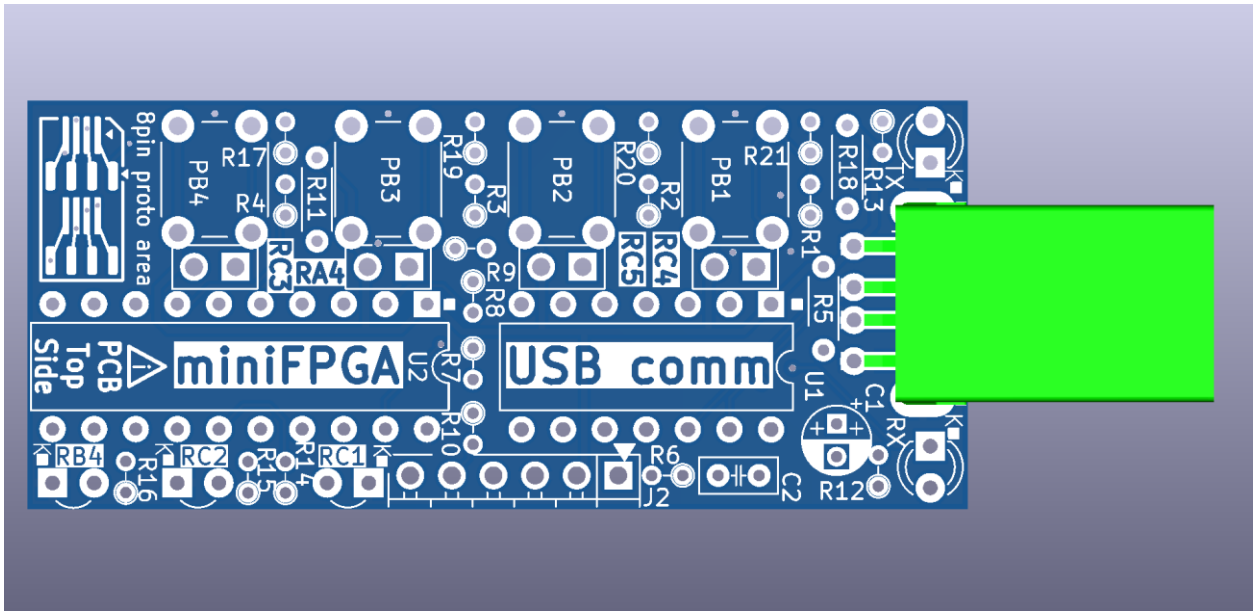

Alternately you can use a USB data cable instead of the USB-A (J1) connector. Strip 20mm of the USB cable outer mantel and 3mm from the internal wires. The bottom side of the PCB clearly shows the USB connections: GND, D+, D-, 5V. We will use these holes to solder our wires. Using a beeper measure carefully the individual wire connections in the USB cable. (if you have a standard table, the wire colors match the table below)

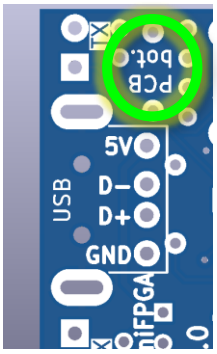

Pin	PCB	Standard color		USB signal
1	5V	Red	Orange	V_{BUS}
2	D-	White	Gold	D-
3	D+	Green		D+
4	GND	Black	Blue	GND

This Photo by Simon Eugster is licensed under CC BY-SA 3.0

According to your preference, you can choose top or bottom side for soldering the wires. We recommend connecting the cable from top and soldering from bottom, same as for the other components.

Never populate a cable and the connector on the same PCB!

4k7 resistors

The 4700 Ω resistors are often referred to 4k7. The color-coding is yellow – blue – red

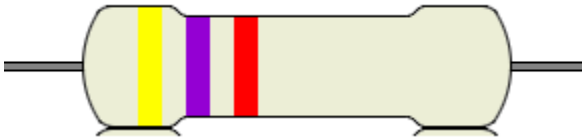

You must bend tightly both legs of the resistors and populate R5, R11, R18. Make sure all resistors lay flat on the PCB.

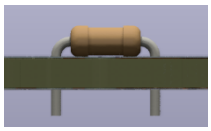

Resistors are non-polarized; therefore, you can freely choose the orientation of the component. When all 3 resistors are in place, carefully turn the PCB and solder the pins. Cut off the excess pins.

After completing this step, your PCB should have following components soldered (current step highlighted in green)

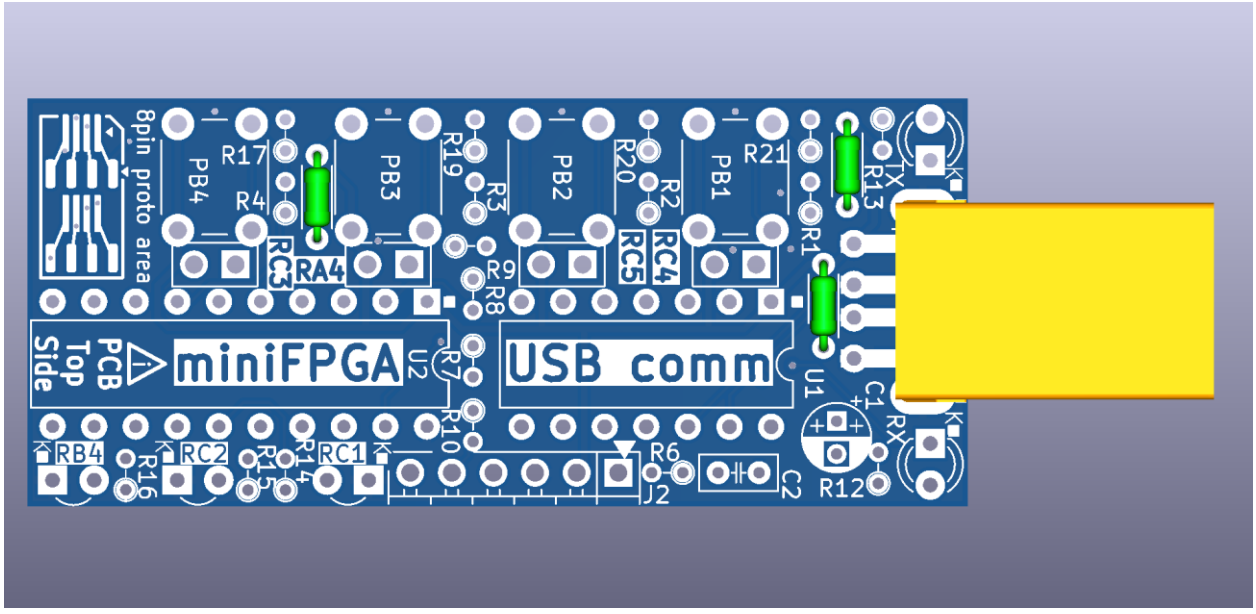

Ceramic capacitor

The ceramic capacitor C2 is 470nF, usually labeled on the components as 474 (47×10^4 pF = 470 000 pF = 470nF) The capacitor is non-polarized; therefore, you can freely choose the orientation of the component.

Make sure C2 is as close to the PCB as comfortably possible. (see the rendered picture for reference)

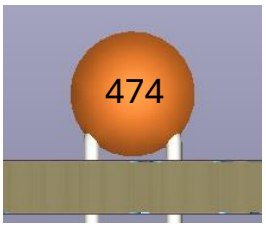

When C2 is in place, carefully turn the PCB and solder the pins. Cut off the excess pins.

After completing this step, your PCB should have following components soldered (current step highlighted in green)

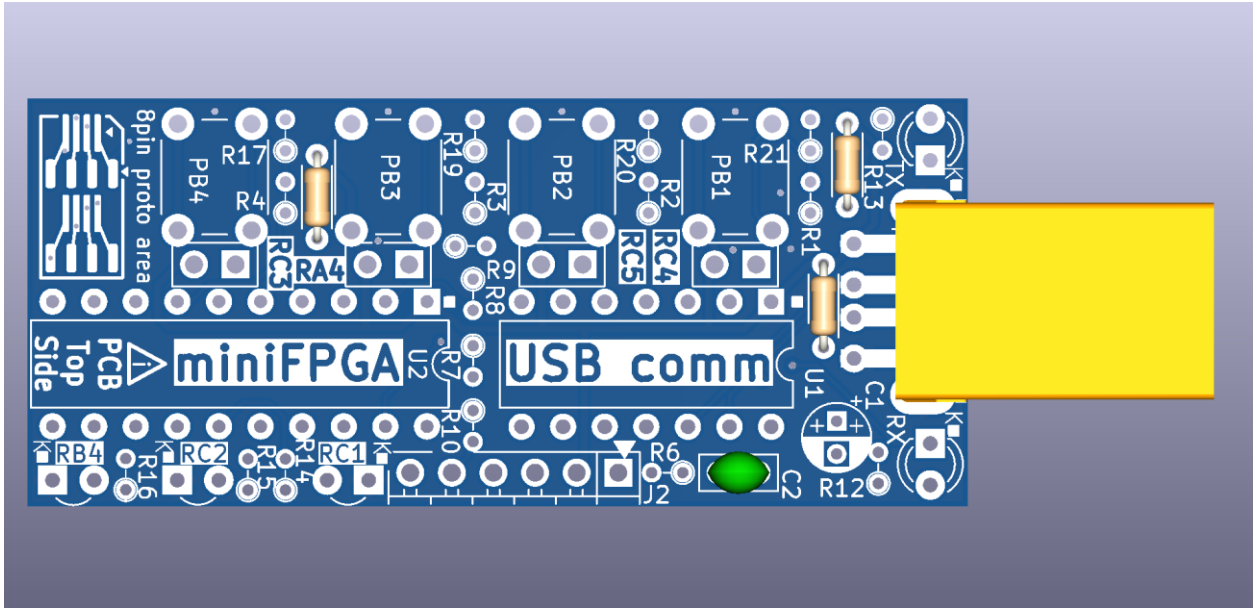

3mm LEDs

LEDs have two pins, and you must take care of installing them in the right orientation! LEDs are components that are non-symmetric otherwise called polarized. The pins are named Anode (A) and Cathode (K). Cathode (K) is the short pin on the component.

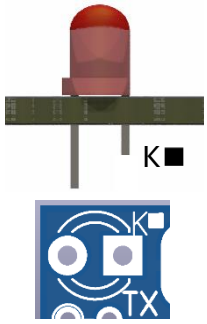

On the back of the PCB you can find a reminder icon about K pin being shorter than A, as well as K goes to square pin...

On the current PCB, LED Cathode (K) must be inserted in the square pad, Anode (A) to the circular pad. As a reminder, all LED components on the PCB has an icon K■, meaning the Cathode (K) must go to the square pad.

Now you are ready to populate LED1, LED2, LED3, LED4, LED5 - observing right polarity. (A● K■) Make sure all LEDs are as close to the PCB as comfortably possible. (see the rendered picture above for reference) When LEDs are in place, carefully turn the PCB and solder the pins. Cut off the excess pins.

After completing this step, your PCB should have following components soldered (current step highlighted in green)

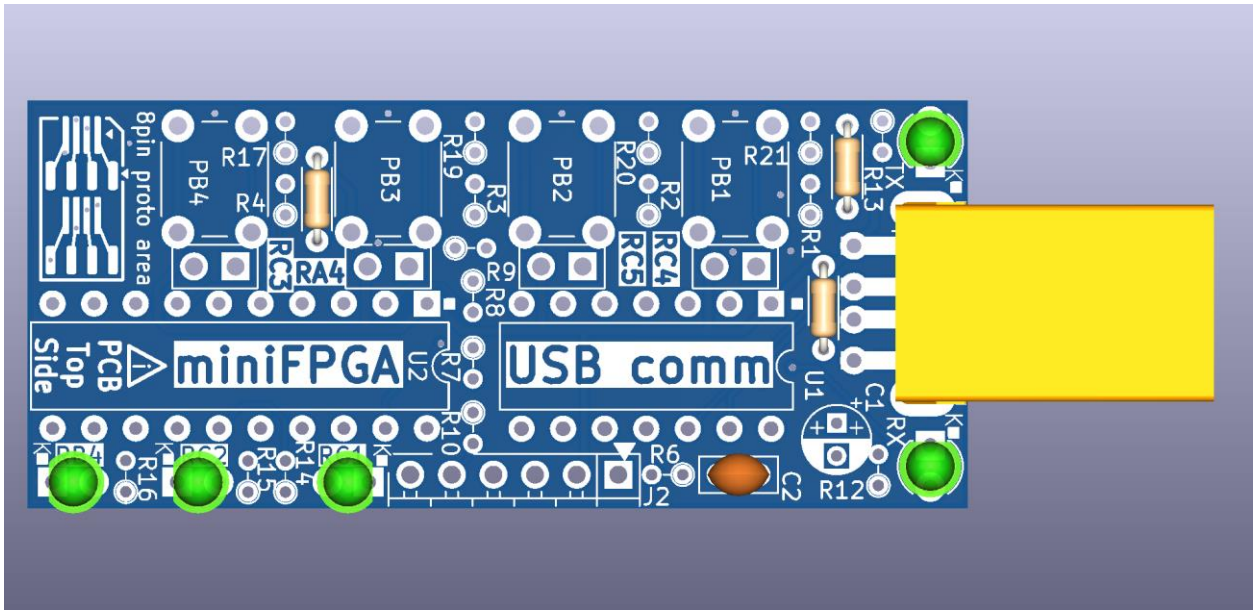

DIP ICs

We will use two DIP (Dual Inline Package) ICs in this project. All ICs have a mark defining PIN1. Care must be taken to populate ICs in the right orientation. On this PCB PIN1 is marked with a ■ and the pad also is square shaped. PIN1 is marked with a small notch on the IC.

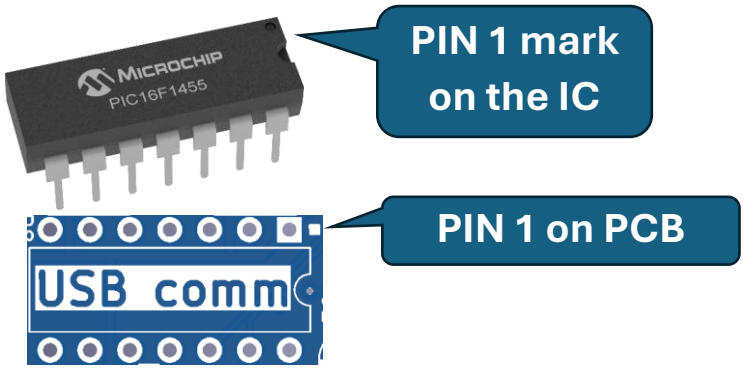

The **USB comm**unications bridge is **PIC16F1455-I/P** and has 14 pins, referenced as U1. The **miniFPGA** is **PIC16F13145-I/P** and has 20 pins, referenced as U2.

Now you are ready to populate U1, U2 - observing right orientation. Make sure both ICs are firmly seated on the PCB. Carefully turn the PCB and solder the pins in a crisscross pattern to minimize heat stress on the component. (pin1, pin8, pin14, pin2, pin9 etc.)

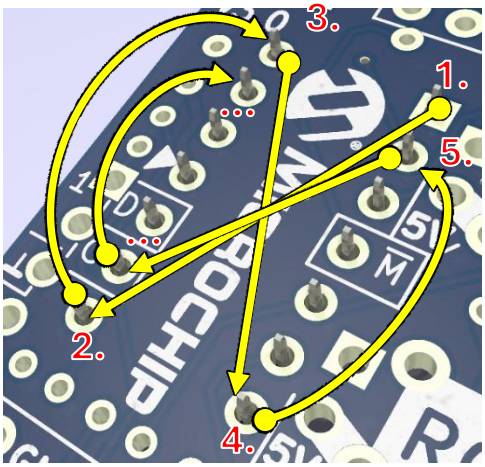

After completing this step, your PCB should have following components soldered (current step highlighted in green)

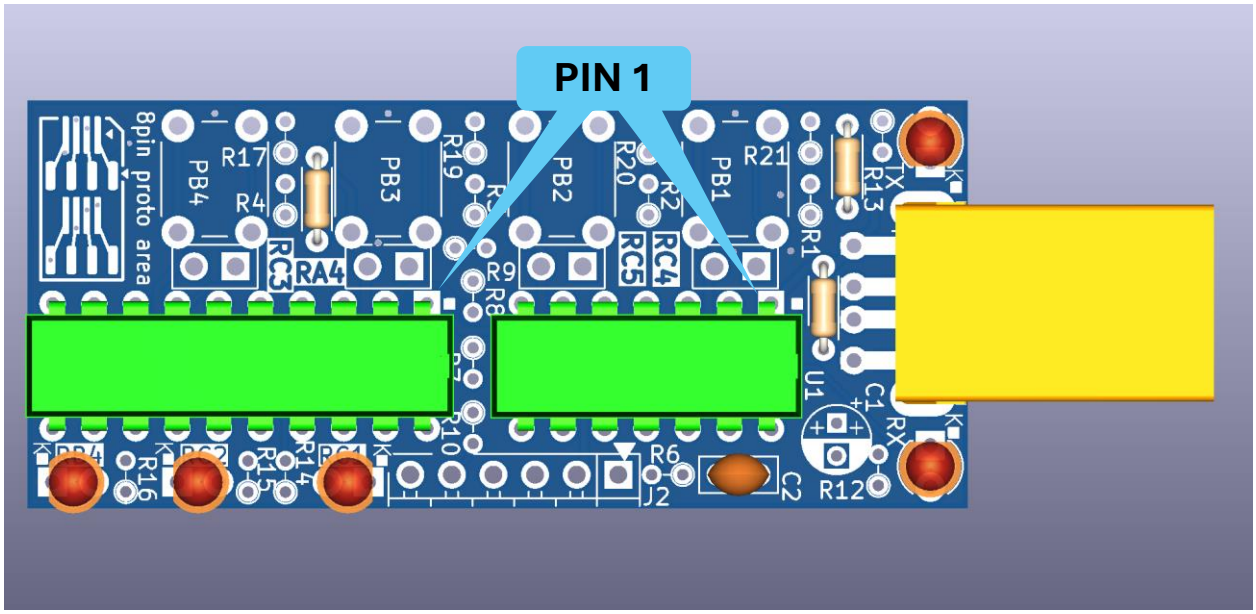

Electrolytic capacitor

The Electrolytic capacitor or Elko has two pins, and you must take care of installing them in the right orientation! Elkos are polarized and have ⊞ and ⊖ pin. Reversing polarity might cause harm to health and property. The body of the Elko is clearly marking the right polarity. Default is a white line marking the negative pin. ⊖ pin is also shorter than ⊞ .

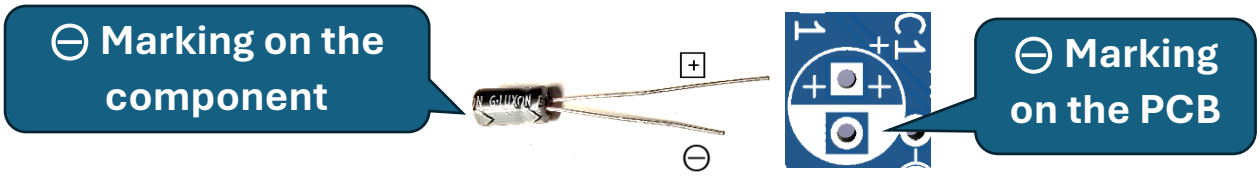

Now you are ready to populate C1 - observing right polarity. (⊞ and ⊖ pin) Make sure C1 is as close to the PCB as comfortably possible. (see the rendered picture below for reference) When C1 is in place, carefully turn the PCB and solder the pins. Cut off the excess pins.

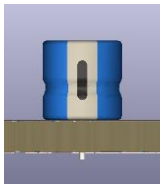

After completing this step, your PCB should have following components soldered (current step highlighted in green)

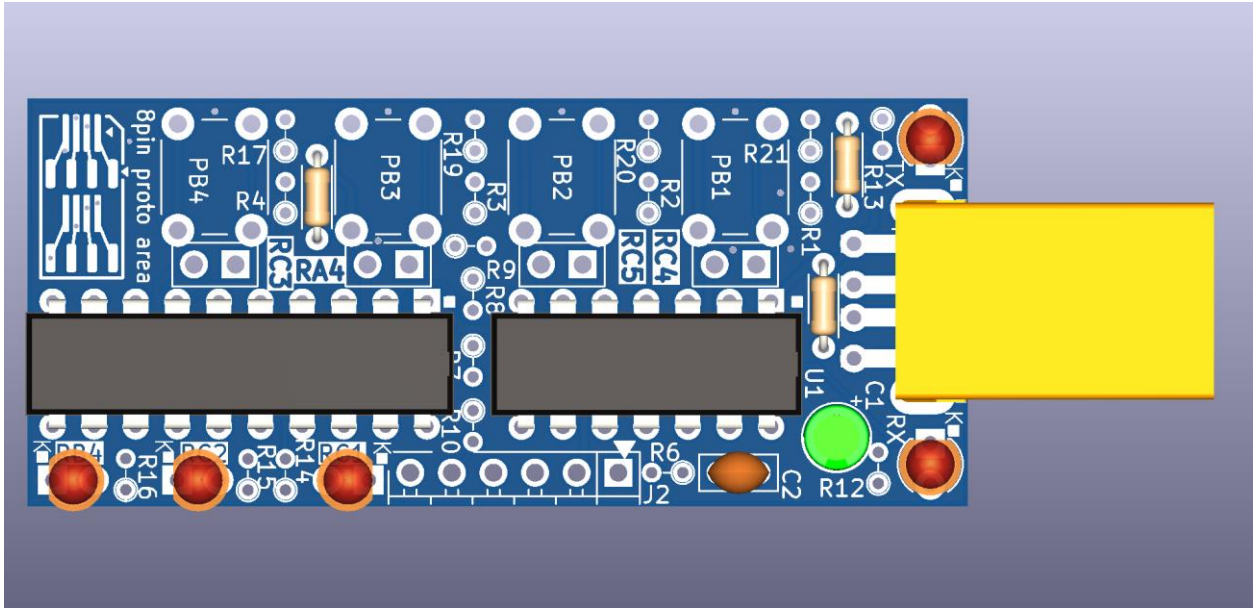

680R resistors

The 680 Ω resistors are often referred to as 680R. The color-coding is blue – grey - brown

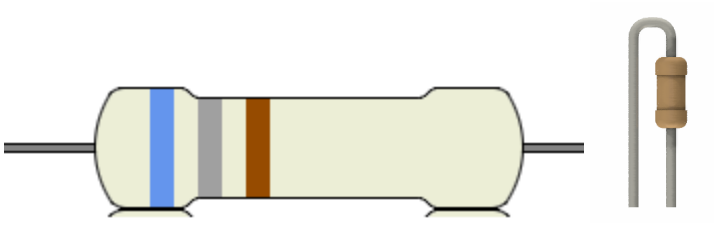

You must bend one leg of the resistor and populate R1, R2, R3, R4, R6, R7, R8, R9, R10, R12, R13, R14, R15, R16, R17, R19, R20, R21. Resistors are non-polarized; therefore, you can freely choose which pin to bend. Make sure all resistors are as close to the PCB as comfortably possible. (see the rendered picture below for reference)

The suggested orientation of the resistors is visible on the picture below. When all 18 resistors are in place carefully turn the PCB and solder the pins. Cut the excess pins.

After completing this step, your PCB should have following components soldered (current step highlighted in green)

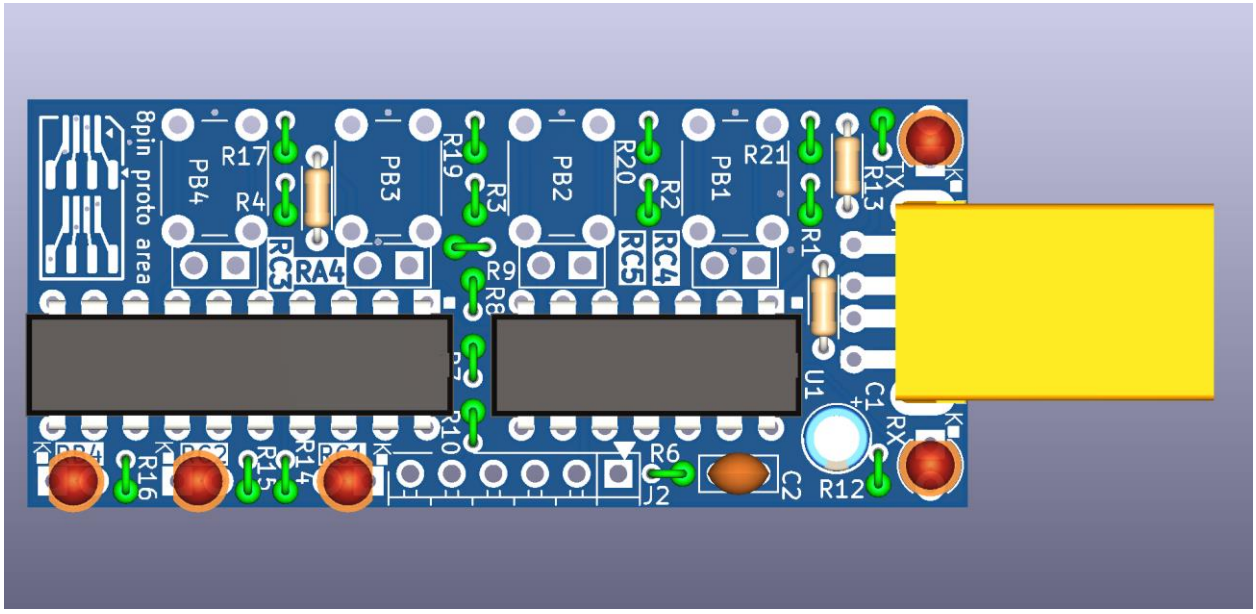

Jumper headers

Sometimes we need static inputs. For this we can use jumpers. JP1, JP2, JP3, JP4 are pins to install jumper caps (not included) to simulate constant press of a button. Pin headers have a shorter and a longer side. The shorter pin goes through the PCB. (please see the rendered picture below)

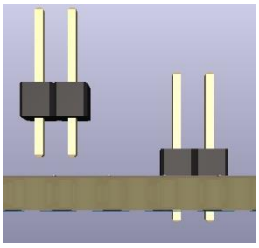

Populate JP1, JP2, JP3, JP4. When all 4 jumper headers are in place, carefully turn the PCB and solder the pins. When soldering, make sure the component is still sitting flush with the PCB top. (please see the rendered picture above).

After completing this step, your PCB should have following components soldered (current step highlighted in green)

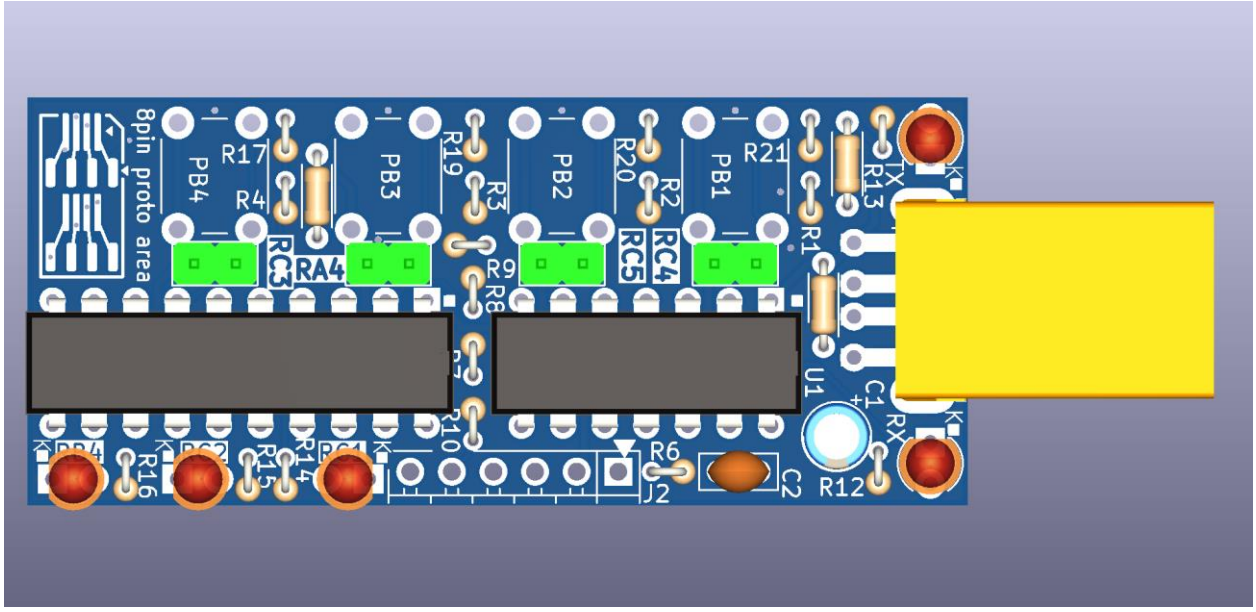

Pushbuttons

The pushbuttons in this design are rectangular. They will fit easily to the footprint in one direction and have mismatching dimensions in the other.

Populate PB1, PB2, PB3, PB4. Make sure all pushbuttons are as close to the PCB as comfortably possible.

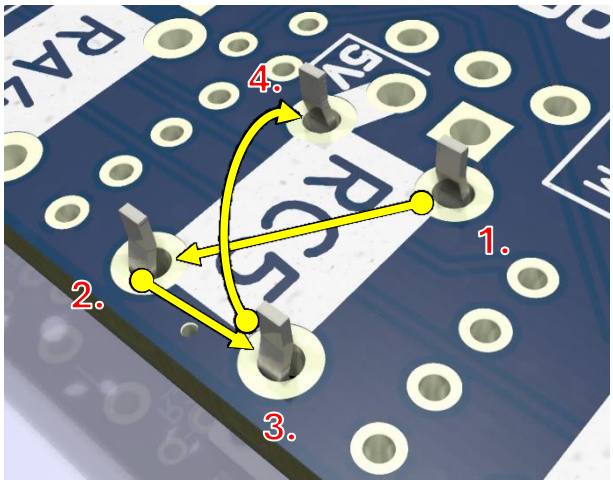

When all buttons are in place, carefully turn the PCB and solder the pins in a crisscross pattern to minimize thermal stress.

After completing this step, your PCB should have following components soldered (current step highlighted in green)

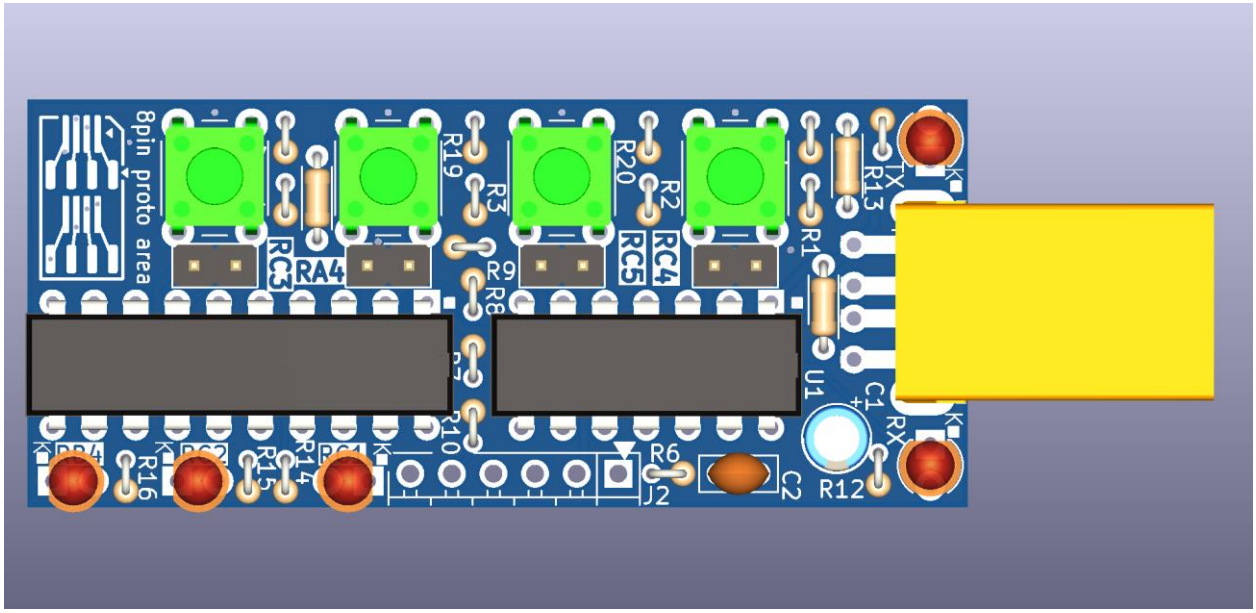

Clean, rinse and dry

The final step is thoroughly cleaning the PCB. You can remove any flux or other chemical residue with isopropyl alcohol. You can use a light brush (e.g. toothbrush) to remove though stains from the PCB surface. Let the PCB dry on air. Using hot air might leave white stain on the surface.

Your finished PCB should look similar to the 3D renderings below:

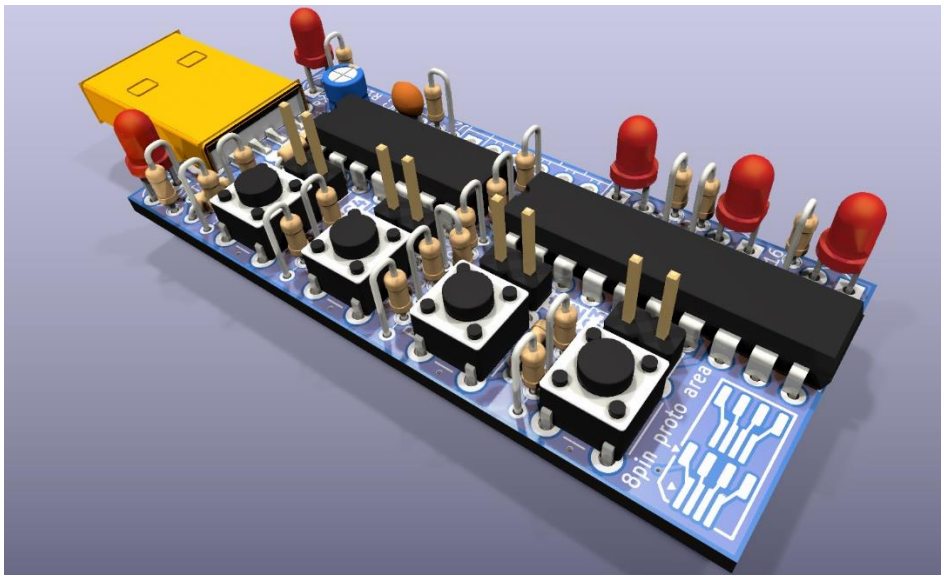

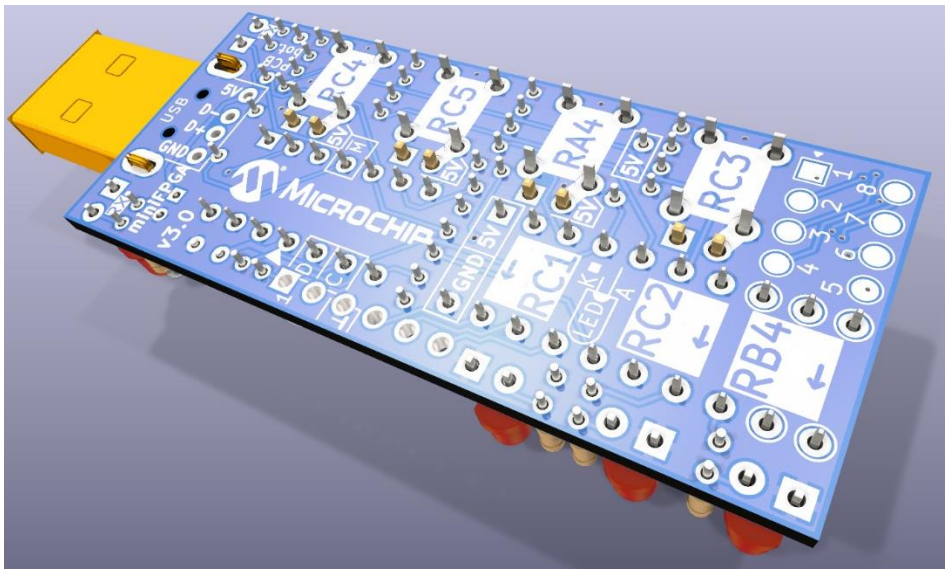

Hope you had great fun with this build!

Now you can connect your PCB to the USB of a PC and go for the Verilog lectures!

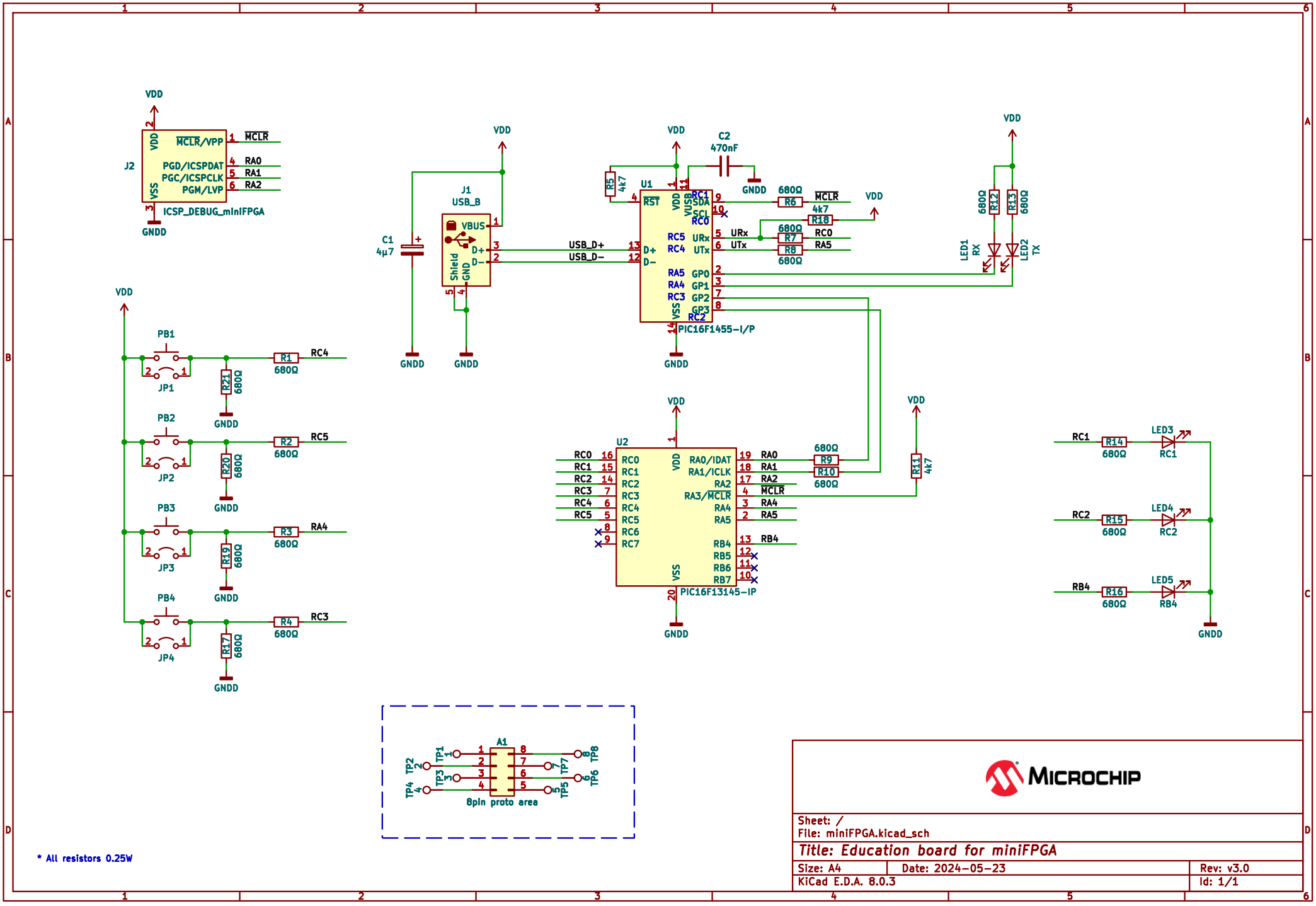
J2
ICSP_DEBUG_miniFPGA
MCLR/VPP
PGD/ICSPDAT
PGC/ICSPCLK
PGM/LVP
VDD
VSS
MCLR
RA0
RA1
RA2
GNDD
J1
USB_B
VBUS
D+
D-
Shield
GND
USB_D+
USB_D-
C1
4µ7
C2
470nF
R5
4k7
U1
PIC16F1455-I/P
RST
VDD
VUSB
RC1
SDA
SCL
RC0
RC5
RC4
URx
UTx
RA5
RA4
RC3
GP0
GP1
GP2
GP3
RC2
R6
680Ω
R18
4k7
R7
R8
R12
R13
LED1
RX
LED2
TX
PB1
PB2
PB3
PB4
JP1
JP2
JP3
JP4
R1
R2
R3
R4
R21
R20
R19
R17
RC4
RC5
RA4
RC3
U2
PIC16F13145-IP
RA0/IDAT
RA1/ICLK
RA2
RA3/MCLR
RA4
RA5
RB4
RB5
RB6
RB7
RC6
RC7
R9
R10
R11
4k7
R14
R15
R16
LED3
LED4
LED5
RC1
RC2
RB4
A1
TP1
TP2
TP3
TP4
TP5
TP6
TP7
TP8
8pin proto area
* All resistors 0.25W
MICROCHIP
Sheet: /
File: miniFPGA.kicad_sch
Title: Education board for miniFPGA
Size: A4
Date: 2024-05-23
Rev: v3.0
KiCad E.D.A. 8.0.3
Id: 1/1

PCB top view

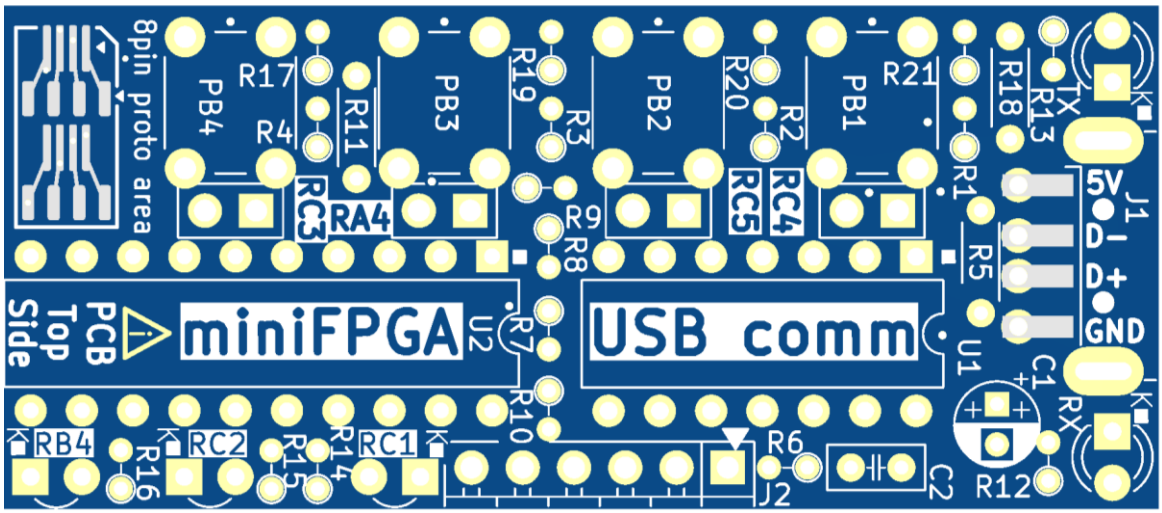

PCB bottom view

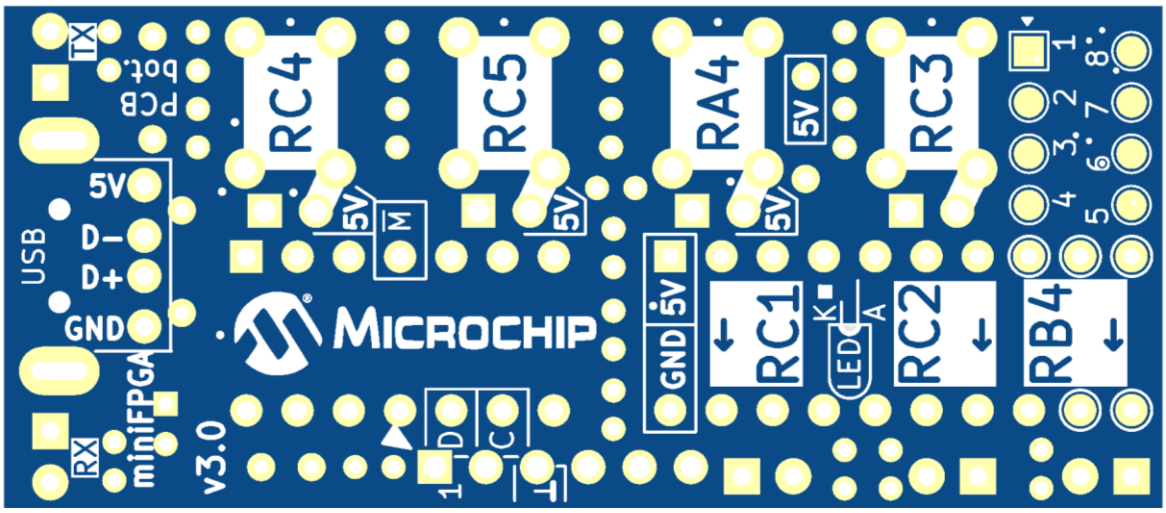

Bill of materials (BOM)

Reference	Value	Qty
C1	4µ7 ≤ C1 ≤ 47µF ≥16V	1
C2	470nF ≥16V	1
J1	USB_A	1
JP1,JP2,JP3,JP4	1×2pin 100mil	4
PB1,PB2,PB3,PB4	Pushbutton 6×5mm	4
LED1,LED2,LED3,LED4,LED5	red ϕ3mm	5
R1,R2,R3,R4,R6,R7,R8,R9,R10,R12, R13,R14,R15,R16,R17,R19,R20,R21	680Ω 0.25W	18
R5,R11,R18	4k7 0.25W	3
U1	PIC16F1455-I/P	1
U2	PIC16F13145-IP	1